AGCO, APACHE, AUDI, BENTLEY, BMW, CASE-IH, CATERPILLAR, CHEVROLET, CLAAS, CUMMINS, DETROIT DIESEL, DEUTZ-FAHR, DODGE, DOOSAN, FENDT, FIAT, GMC, FORD, HAGIE, HYUNDAI, ISUZU, JOHN DEERE, KAWASAKI, KRONE, KUBOTA, LIEBHERR, MACK, MAN, MERCEDES-BENZ, MILLER, MINI, NEW HOLLAND, PORSCHE, SPRACOUPE, WILLMAR, VERMEER, VOLKSWAGEN, VOLVO, AGCO, APACHE, AUDI, BENTLEY, BMW, CASE-IH, CATERPILLAR, CHEVROLET, CLAAS, CUMMINS, DETROIT DIESEL, DEUTZ-FAHR, DODGE, DOOSAN, FENDT, FIAT, GMC, FORD, HAGIE, HYUNDAI, ISUZU, KAWASAKI, KRONE, MERCEDES-BENZ, ROGATOR, SCANIA, VOLVO, AGCO, APACHE, AUDI, BENTLEY, CATERPILLAR, CHEVROLET, CLAAS, DODGE, DOO

UP TO +25% MORE POWER MORE TORQUE*

WITH STEINBAUER POWER MODULE

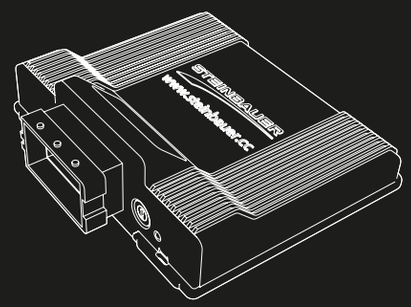

STEINBAUER´s foundation remains strong because our products are developed, manufactured and distributed by the professionals in our team and our dealer network. We strive for excellence and quality everyday, what we do and the way we conduct ourselves continues to set us apart. STEINBAUER has been here for almost two decades now, we have the track record to prove we´re in it for the long haul.

HERBERT STEINBAUER
CEO AND FOUNDER

*Results dependent on, but not limited to: individual driver habits and experience; vehicle handling; type of engine and standard manufacturers engine variables; total load weight and distribution; weather, road and terrain conditions.

QUALITY. SERVICE. **STEINBAUER.**

To ensure that we continue to offer each and every customer world class customer service we have developed a solid sales and support force in Austria, England and North America. Our sales professionals are at the forefront of contact with our customers and dealers.

STEINBAUER sales representatives – sell just **STEINBAUER**!

- AVAILABLE IN OVER 30 COUNTRIES
- DEDICATED GLOBAL DEALER NETWORK
- FACTORY TECHNICAL SUPPORT
- IN-HOUSE DEVELOPMENT AND MANUFACTURING
- AUSTRIAN QUALITY MANUFACTURING AND COMPONENTS

20TH ANNIVERSARY 1996 · 2016

AUTHORIZED DEALER

STEINBAUER
www.steinbauer.cc

STEINBAUER Performance LLC. • 364 Crompton Street • Charlotte NC 28273
T:+1 (704) 587 - 0856 • E: info@steinbauerusa.com

STEINBAUER products and the STEINBAUER logo, are registered trademarks and belong to STEINBAUER Performance Austria GmbH. All marketing material including graphics, symbols, images and illustrations and all textual formulations are protected by copyright and may not be replicated, used or disclosed to any third parties without the express written permission of STEINBAUER Performance Austria GmbH. Violators will be prosecuted. • Changes due to constant innovation are reserved. • Copyright © 2017 STEINBAUER Performance Austria GmbH. All rights reserved.

STEINBAUER®

UP TO +25% MORE POWER MORE TORQUE*

WITH STEINBAUER POWER MODULE

HEAVY EQUIPMENT & FORESTRY MACHINERY

IMPROVED PRODUCTIVITY

- EASE OF INSTALLATION
- NO CHANGE IN ECU PROGRAMMING
- ADVANCED EUROPEAN TECHNOLOGY
- REDUCED OPERATING COSTS
- TESTED IN NORTH AMERICA
- DUST, VIBRATION AND MOISTURE RESISTANT
- NO INCREASE IN COMMON RAIL PRESSURE

www.steinbauer.cc

WORK SMARTER.
NOT HARDER.

STEINBAUER®

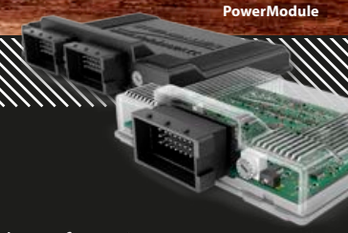

STEINBAUER Performance is an innovative, brand independent developer and manufacturer of advanced performance electronics for modern diesel and turbo gas engines. With over 20 years of experience in the industry, STEINBAUER offers products that improve the efficiency and performance of your engine.

Why buy **STEINBAUER** ...

- REDUCED CYCLE TIMES
  Move loads more efficiently
- CONSTANT TORQUE
  More power for larger attachments*
- CUSTOM PROGRAMS
  To suit individual job requirements
- OPTIMIZED DRIVING
  Under full load or on steep inclines

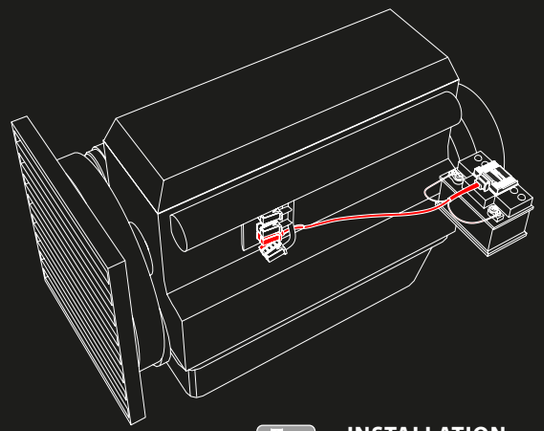

INSTALLATION
Ease of installation with original connectors.

NO INTERFERENCE
Does not interfere or leave footprints in the ECU.

DURABLE CONSTRUCTION
Dust, vibration, moisture and heat resistant.

PRODUCT RANGE
Largest application list on the market.

POWER MODULE WARRANTY
3 year extended warranty with product registration.**

SERVICE
Factory technical support.

** 1 year warranty with purchase. Warranty extended to 3 years upon registration. Testing conducted on pictured vehicles.
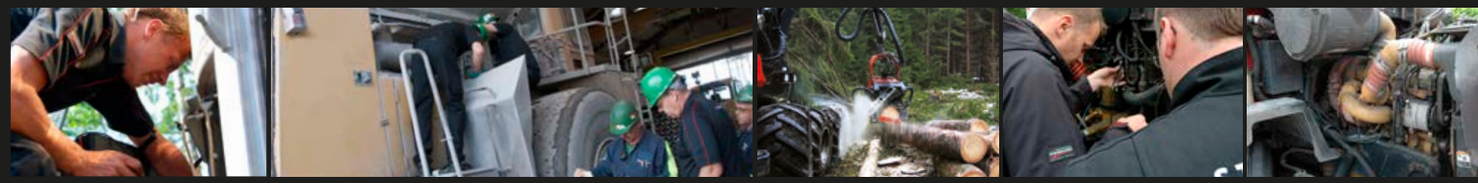
w w w . s t e i n b a u e r . c c